Thermal kiosk printer KMP22
Specification

Contents

1 Introduction 1
1.1 Brief introduction 1
1.2 Main features 1
2 Dimension Figure and Pin Definitions 2
2.1 External Dimension Figure 2
2.2 Pin Definitions 3
3 Load paper roll direction 4
4 Technical specifications 3
5 List of Commands 4
6 Command in details 6
① Print and feed command 6
Print and line feed 6
Print and carriage return 6
Print and feed paper 6
Print and feed n lines 7
② Character command 7
Set line spacing 7
Select default line spacing 8
Set absolute print position 8
Set left space 8
Set horizontal and vertical movement unit 9
Set right-side character spacing 9
Select character font 10
Select print mode(s) 10
Select character size 11
Turn white/black reverse printing mode 12
Turn underline mode on/off 12
Turn 90°clockwise rotation mode on/off 13
Turn emphasized mode on/off 14
Turn double-strike mode on/off 14
Turn upside-down print mode on/off 14
Select justification（Left justification、centering、Right justification） 14
Select Chinese character mode 15
Cancel Chinese character mode 15
Select print mode(s) for Chinese characters 16
Select an international character set 16
Select character code table 18
③ Bit image command 20
Print MSB BITMAP 20
Print LSB bitmap 20
Select bit-image mode 21
Define downloaded bit image 23

Print downloaded bit image 25
Define NV bit image 25
Print NV bit image 29
Print raster bit image 30
④ Tab command 31
Horizontal tab 31
Set horizontal tab positions 31
⑤ Bar code command 32
Select printing position for HRI characters 32
Select bar code height 33
Set bar code width 33
Print bar code 34
⑥ QR CODE COMMAND 38
Set the model type 38
Set the QR code error correction level error (ECC) 38
Set the QR code graphic data 38
Print store QR codes graphics 39
⑦ STATUS COMMAND 39
Transmit status 39
Real-time transmission status 40
Send real-time request to printer 42
Enable/Disable Automatic Status Back (ASB) 43
Set the process ID response 43
⑧ Other command 44
Initialize printer 44
Printing test paper 44
Select cut mode and cut paper 44
Partial cut (one point left uncut) 45
Partial cut (three points left uncut) 45
Set the print concentration 45

\

1 Introduction

1.1 Brief introduction

KMP22 is a thermal embedded kiosk printer with high stability, which is widely used in receipt printing field.

KMP22 connects other devices via USB or serial. The supported operating systems are as following:

WINDOWS XP
WINDOWS 7 32/64
WINDOWS 8
WINDOWS 10
UBUNTU 12.04 32/64
UBUNTU 14.04 32/64
MAC OS

1.2 Main features

·Thermal printer mechanism
·Support USB+Serial communication
·Easy paper loading
·Easy to integrate into kiosk designs
·Automatic paper feeding
·Auto Cutter with long lifespan
·Paper near end and no paper fetch after printing out detection function
·With a mounting bracket, support big paper roll

2 Dimension Figure and Pin Definitions

2.1 External Dimension Figure

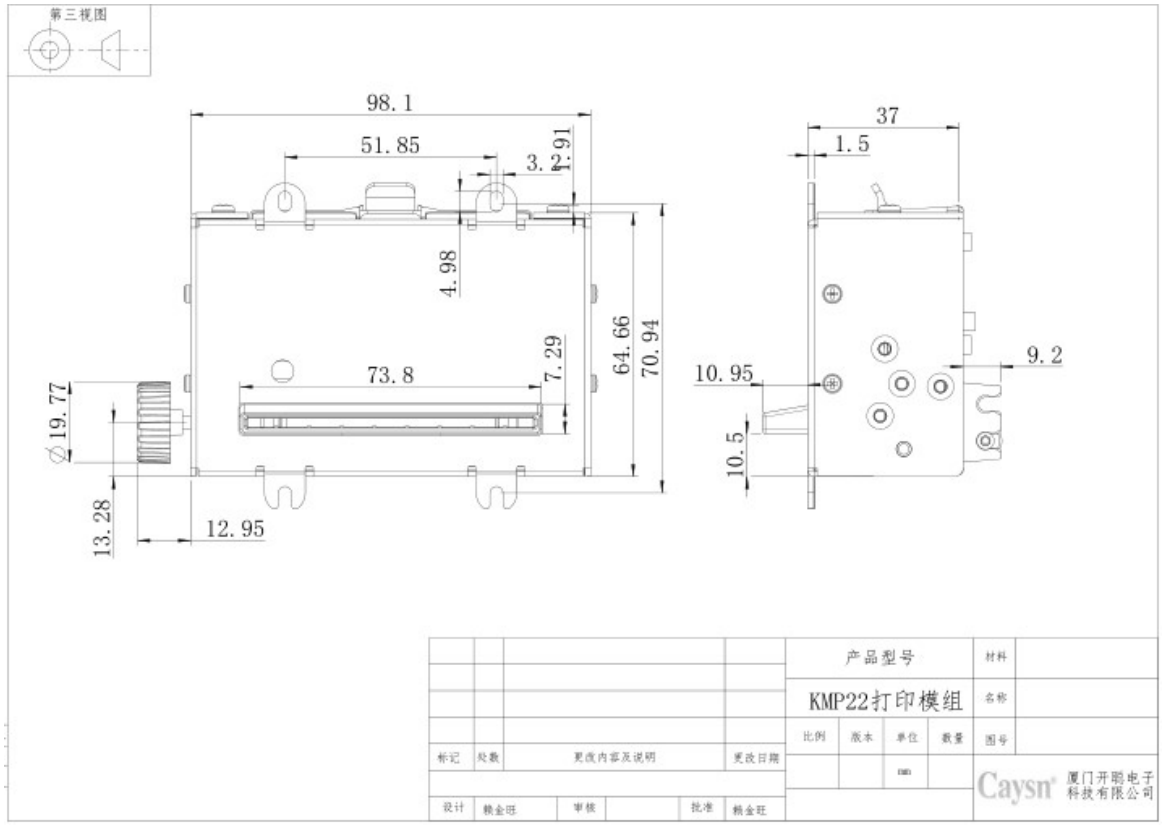

2.2 Pin Definitions

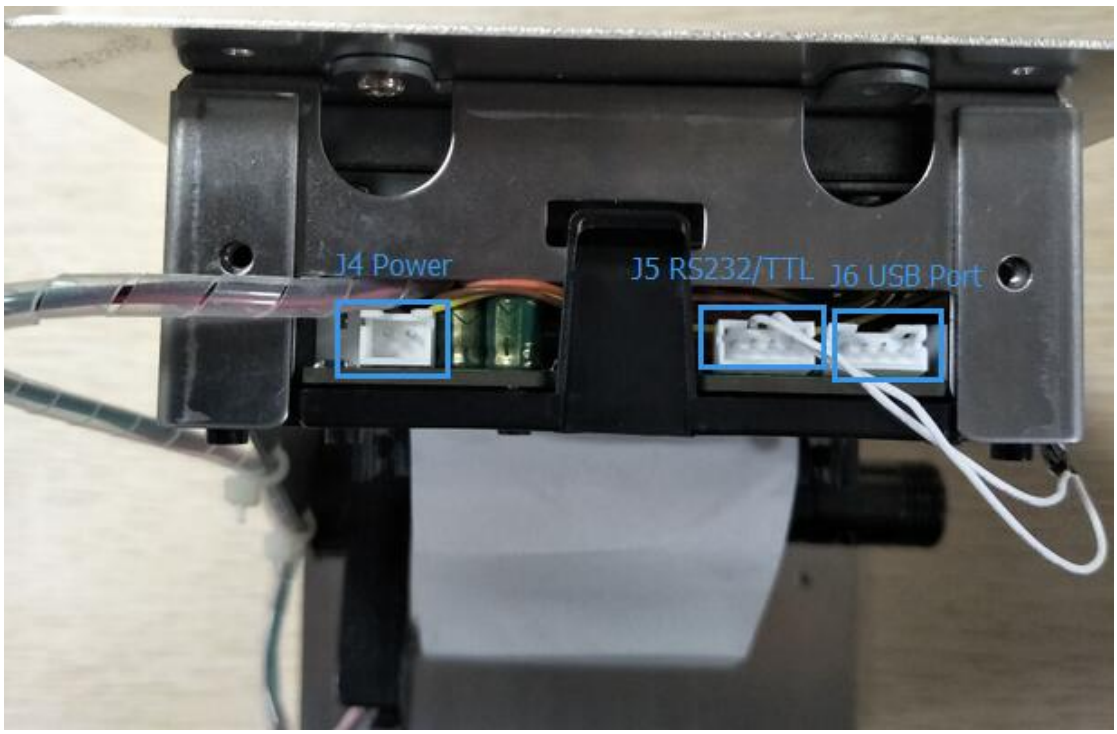

J6 USB port

Pin number	Pin number	Definition
1	VUSB	+5V
2	D-	DATA-
3	D+	DATA+
4	GND	GND

J4 Power supply

Pin number	Signal name	Definition
1	VIN	+12V
2	GND	GND

J5 RS232 interface

Pin number	Signal name	function
1	DTR(printer output)	output
2	TX(Tx,printer output)	output
3	RX(Rx, printer input)	input
4	GND	GND

3 Load paper roll direction

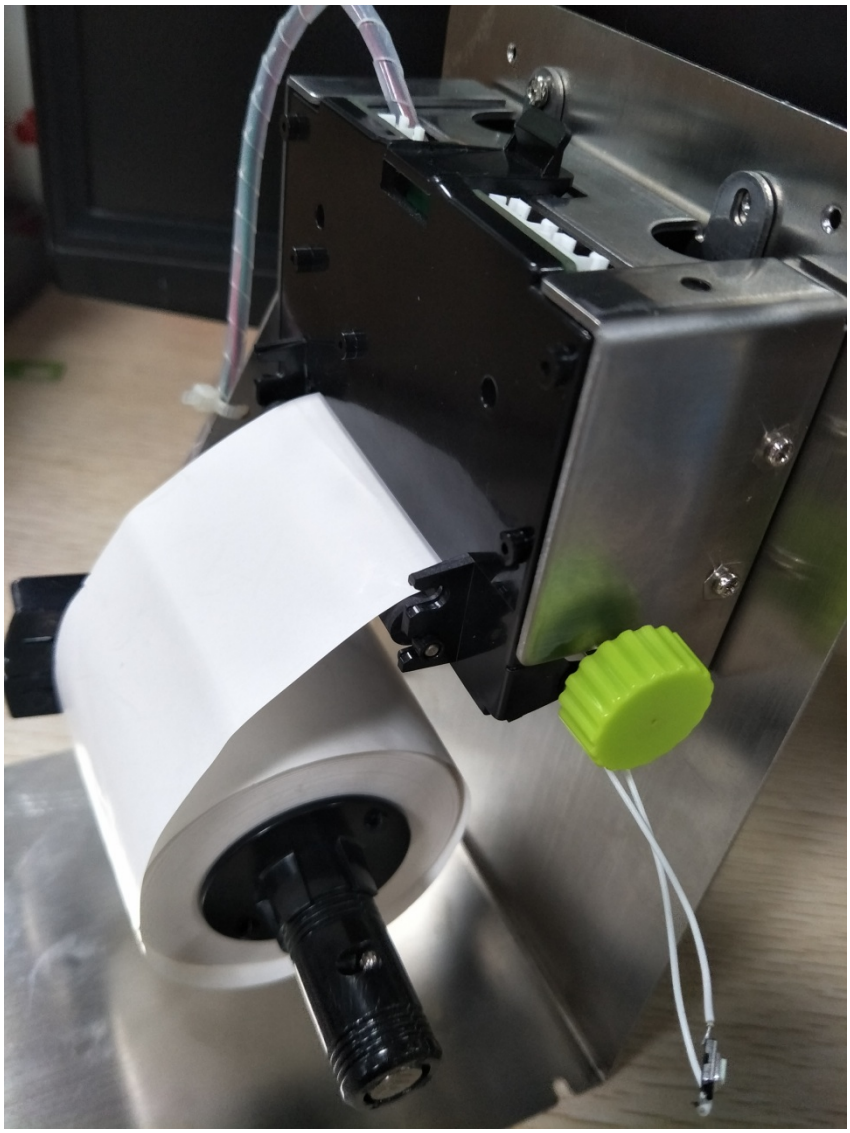

Note: 1. Paper feed direction.

2. The printer has a manual operation roller which can be manually fed for option

3. Automatic paper feeding after the printer power on.

4 Technical specifications

Printing method	Thermal dot line printing
Paper width	58mm
Printing width	48mm
Resolution	203 DPI
Dots per line	384dots
Printing speed	120mm/s
Printing contents	Chinese, ASCII characters, 1D barcode, 2D barcode, Support dots printing with different densities, Support raster bitmap print, Support to download the bitmap print
Font(default)	9X17, 9×24, 8×16, 16×18, 12X24(ASCII), 24x24(Chinese)

5 List of Commands

LF	Print and line feed	**Print and feed command**
CR	Print and carriage return	
ESC J	Print and feed n points	
ESC d	Print and feed n lines	
ESC 3	Set n points line spacing	**Character command**
ESC 2	Select default line spacing	
ESC $ nL nH	Set absolute print position	
GS L nL nH	Set left space	
ESC SP n	Set right-side character spacing	
ESC M n	Select character font	
ESC ! n	Select print mode(s)	
GS ! n	Select character size	
GS B n	Turn white/black reverse printing mode	
ESC - n	Turn underline mode on/off	
ESC V n	Turn 90° clockwise rotation mode on/off	
ESC E n	Turn emphasized mode on/off	
ESC G n	Turn double-strike mode on/off	
ESC { n	Turn upside-down print mode on/off	
ESC a n	Select justification	
FS &	Select Chinese character mode	
FS .	Cancel Chinese character mode	
FS ! n	Select print mode(s) for Chinese characters	
ESC R n	Select an international character set	
ESC t n	Select character code table	
DC2 V	Printer MSB Bitmap	**Bit image command**
DC2 v	Printer LSB Bitmap	
ESC *	Select bit-image mode	
GS *	Define downloaded bit image	
GS / m	Print downloaded bit image	
FS q	Define NV bit image	
FS p n m	Print NV bit image	
GS v 0 m	Print raster bit image	
HT	Horizontal tab	**Tab command**
ESC D	Set horizontal tab positions	
GS H	Select printing position for HRI characters	**Bar code command**
GS h	Select bar code height	
GS w	Set bar code width	
GS k	Print bar code	
GS (k pL pH cn fn n (fn=67)	Set the module type	**QR code command**

GS (k pL pH cn fn n (fn=69)	Set the QR code error correction level error (ECC)	
GS (k pL pH cn fn m d1…dk (fn=80)	Set the QR code graphic data	
GS (k pL pH cn fn m (fn=81)	Print store QR codes graphics	
GS r n	Transmit status	**STATUS command**
DLE EOT n	Real-time transmission status	
DLE ENQ n	Send real-time request to printer	
GS a n	Enable/Disable Automatic Status Back (ASB)	
GS a n	Set the process ID response	
ESC @	Initialize printer	**Other command**
DC2 T	Printing test paper	
GS V	Select cut mode and cut paper	
ESC i	Partial cut (one point left uncut)	
ESC m	Partial cut (three points left uncut)	
ESC 7	Set the print concentration	

6 Command in details

① Print and feed command

Print and line feed

Name	Print and line feed
Format	ASCII : LF Decimal : 10 Hex : 0A
Description	Prints the data in the print buffer and feeds one line, based on the current line spacing.
Range	
Default	
Support model	All the printers
Note	
For Example	1B 40 1C 26 30 31 32 41 42 43 CFC3C3C5BFAAB4CFB5E7D7D3 0d 0a 1b 4a 10 1B 40 1C 26 30 31 32 41 42 43 CFC3C3C5BFAAB4CFB5E7D7D3 0d 0a 1b 4a 30 1B 40 1C 26 30 31 32 41 42 43 CFC3C3C5BFAAB4CFB5E7D7D3 0d 0a

Print and carriage return

Name	Print and carriage return
Format	ASCII : CR Decimal : 13 Hex : 0D
Description	When automatic line feed is enabled, this command functions the same as **LF**; when automatic line feed is disabled, this command is ignored.
Range	
Default	
Support model	All the printers
Note	This command line feed is ignored with a serial interface model. Sets the print starting position to the beginning of the line.
For Example	

Print and feed paper

Name	Print and feed paper
Format	ASCII : ESC J n Decimal : 27 74 n Hex : 1B 4A n
Description	Prints the data in the print buffer and feeds the paper [n× 0.125 mm (0.0049”)].
Range	$0 \leq n \leq 255$

Default	
Support modal	All the printers
Note	After printing is completed, this command sets the print starting position to the beginning of the line. The paper feed amount set by this command does not affect the values set by **ESC 2** or **ESC 3**. In standard mode, the printer uses the vertical motion unit (y).
For example	1b 40 30 31 32 1b 4a 10

Print and feed n lines

Name	Print and feed n lines
Format	ASCII : ESC d n Decimal : 27 100 n Hex : 1B 64 n
Description	Prints the data in the print buffer and feeds n lines.
Range	0 ≤ n ≤ 255
Default	
Support modal	All the printers
Note	This command sets the print starting position to the beginning of the line. This command does not affect the line spacing set by **ESC 2** or **ESC 3**. The maximum paper feed amount is 1016 mm (40 inches). If the paper feed amount (n line spacing) of more than 1016 mm (40 inches) is specified, the printer feeds the paper only 1016 mm (40 inches).
For example	1b 40 1C 26 30 31 32 41 42 43 CFC3C3C5BFAAB4CFB5E7D7D3 1b 64 01 1b 40 1C 26 30 31 32 41 42 43 CFC3C3C5BFAAB4CFB5E7D7D3 1b 64 02 1b 40 1C 26 30 31 32 41 42 43 CFC3C3C5BFAAB4CFB5E7D7D3 1b 64 00

② Character command

Set line spacing

Name	Set line spacing
Format	ASCII : ESC 3 n Decimal : 27 51 n Hex : 1B 33 n
Description	Sets the line spacing to [n×0.125 mm].
Range	0 ≤ n ≤ 255
Default	n = 33
Support modal	All the printers
Note	 If set the line spacing is less than the maximum character height in a line, so the bank line spacing is equal to the maximum character level. The line spacing can be set default values,when appear ESC 2,ESC @, reset

	the printer and printer power
For example	1b 40 1b 33 30 1C 26 30 31 32 41 42 43 CFC3C3C5BFAAB4CFB5E7D7D3 0d 0a 1C 26 30 31 32 41 42 43 CFC3C3C5BFAAB4CFB5E7D7D3 0d 0a 1C 26 30 31 32 41 42 43 CFC3C3C5BFAAB4CFB5E7D7D3 0d 0a 1b 32 1C 26 30 31 32 41 42 43 CFC3C3C5BFAAB4CFB5E7D7D3 0d 0a

Select default line spacing

Name	Select default line spacing
Format	ASCII ： ESC 2 Decimal ： 27 50 Hex ： 1B 32
Description	Selects 4.125mm (33× 0.125 mm) line spacing.
Range	0 n 255
Default	33 Dots
Support modal	All the printers
Note	With reference to ESC 3 command. If set the line spacing is less than the maximum character height in a line, so the bank line spacing is equal to the maximum character level.
For example	

Set absolute print position

Name	Set absolute print position
Format	ASCII ： ESC $ nL nH Decimal ： 27 36 nL nH Hex ： 1B 24 nL nH
Description	The distance from the beginning of the line to the print position is[(nL + nH×256)×0.125 mm].
Range	0 ≤ nL ≤ 255，0 ≤ nH ≤ 255
Default	
Support modal	All the printers
Note	Settings outside the specified printable area are ignored. In standard mode, the horizontal motion unit (x) is used.
For example	1b 40 1b 24 20 00 1C 26 30 31 32 41 42 43 CFC3C3C5BFAAB4CFB5E7D7D3 0d 0a 1C 26 30 31 32 41 42 43 CFC3C3C5BFAAB4CFB5E7D7D3 0d 0a

Set left space

Name	Set left space
Format	ASCII ： GS L nL nH Decimal ： 29 76 nL nH

	Hex ： 1D 4C nL nH
Description	Set left space（nL + nH × 256) dots.
Range	0 ≤ nL ≤ 255，0 ≤ nH ≤ 255
Default	
Support modal	All the printers
Note	This command is only effective in a line of the starting position of the treatment. As shown in the figure： 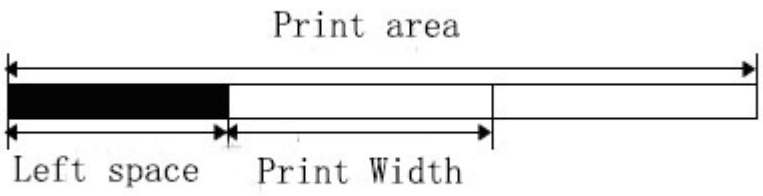 If set outside the printable area, use the maximum printing unit.
For example	1b 40 1d 4c 50 00 1C 26 30 31 32 41 42 43 CFC3C3C5BFAAB4CFB5E7D7D3 0d 0a 1C 26 30 31 32 41 42 43 CFC3C3C5BFAAB4CFB5E7D7D3 0d 0a

Set horizontal and vertical movement unit

Name	Set horizontal and vertical movement unit
Format	ASCII ： GS P x y Decimal ： 29 80 x y HEX ： 1D 50 x y
Description	• Set approximation horizontal movement unit 25.4/ x mm（ 1/ x inch）; set approximation vertical movement unit 25.4/ y mm（1/ y inch). •When x and y is 0,the x and y is set to default.
Range	0 ≤ x ≤ 255, 0 ≤ y ≤ 255
Default	x = 200, y = 380，a movement unit is the point of a print. The horizontal distance is about 1/8mm ; the vertical distance is about 1/15mm.
Support modal	80XXX
Note	
For example	1d 50 c8 c8 1B 4C 1B 57 30 00 00 00 78 00 30 00 1B 33 18 1B 57 30 31 32 30 31 32 30 31 32 30 31 32 30 31 32 30 31 32 30 31 32 30 31 32 30 31 32 30 31 32 30 31 32 30 31 32 30 31 32 30 31 32 30 31 32 30 31 32 30 31 32 30 31 32 0C

Set right-side character spacing

[Name] Set right-side character spacing

[Format] ASCII ESC SP n
Hex 1B 20 n
Decimal 27 32 n
[Range] 0 ≤ n ≤ 255
[Default] n = 0
[Description] • Sets the right-side character spacing to [n × (horizontal or vertical motion unit)].
[Note] • The maximum right-side spacing is 35.98 mm {255/180"}.

Select character font

[Name] Select character font
[Format] ASCII ESC M n
Hex 1B 4D n
Decimal 27 77 n
[Range] n = 0, 1, 48, 49
[Default] n = 0
[Description] • Selects a character font.

n	Character font
0, 48	Character font A (12 × 24)
1, 49	Character font B (9×24) 。
2，50	Character font C (9×17)
3，51	Character font D (8×16)

[Note] • When auto replacement of the font with the customized value, ESC ! is set for the selected font, the font to be replaced is enabled.

Select print mode(s)

Name	Select print mode(s)
Format	ASCII ： ESC ! n Decimal ： 27 33 n Hex ： 1B 21 n
Description	Selects print mode(s) using n as follows:（Font、white/black reverse、Inversion、Bold、double-height、double-width、underline） **bit function value** **0 1** 0 font normal small 1 inverse cancel set 2 inversion cancel set 3 bold cancel set 4 double-height cancel set 5 double-width cancel set 6 underline cancel set 7 undefined
Range	
Default	n = 0
Supprot modal	All the printers

Note	The command for Chinese fonts and foreign fonts are effective ESC @,dump and restart,Reset the printer,This command setting failure
For example	1B 40 1B 21 01 30 31 32 0D 0A 1B 40 1B 21 02 30 31 32 0D 0A 1B 40 1B 21 04 30 31 32 0D 0A 1B 40 1B 21 08 30 31 32 0D 0A 1B 40 1B 21 10 30 31 32 0D 0A 1B 40 1B 21 20 30 31 32 0D 0A 1B 40 1B 21 40 30 31 32 0D 0A 1B 40 1B 21 80 30 31 32 0D 0A

Select character size

Name	Select character size
Formal	ASCII : GS ! n Decimal : 29 33 n HEX : 1d 21 n
Description	1 vertical number of times 8, 1 horizontal number of times 8 Selects the character height using bits 0 to 2 and selects the character width using bits 4 to 7, as follows: **Table 1** Set the width of character **Table 2** Set the height of character

HEX	Decimal	width
00	0	1(normal)
10	16	2(double-width)
20	32	3
30	48	4
40	64	5
50	80	6
60	96	7
70	112	8

HEX	Decimal	width
00	0	1(normal)
01	1	2(double-height)
02	2	3
03	3	4
04	4	5
05	5	6
06	6	7
07	7	8

Range	
Default	n = 0
Suuport modal	All the printers
Note	This command is effective for all characters (alphanumeric and Chinese), except for HRI characters. ESC @,dump and restart,Reset the printer,This command setting failure.
For example	1b 40 1c 26 1d 21 10 30 31 32 B0 AE CE D2 D6 D0 BB AA 0d 0a 1B 40 1c 26

	1d 21 01 30 31 32 B0 AE CE D2 D6 D0 BB AA 0d 0a 1B 40 1c 26 1d 21 11 30 31 32 B0 AE CE D2 D6 D0 BB AA 0d 0a

Turn white/black reverse printing mode

Name	Turn white/black reverse printing mode
Format	ASCII : GS B n Decimal : 29 66 n HEX : 1d 42 n
Description	Turns on or off white/black reverse printing mode. When the LSB of n is 0, white/black reverse mode is turned off. When the LSB of n is 1, white/black reverse mode is turned on.
Range	
Default	n = 0
Support modal	All the printers
Note	Only the lowest bit of n is valid. This command is available for built-in characters and user-defined characters. When white/black reverse printing mode is on, it also applies to character spacing set by **ESC SP**. This command does not affect bit images, user-defined bit images, bar codes,HRI characters, and spacing skipped by **HT**, **ESC $**. This command does not affect the space between lines. White/black reverse mode has a higher priority than underline mode. Even if underline mode is on, it is disabled (but not canceled) when white/black reverse mode is selected.
For example	1b 40 1c 26 1d 42 00 30 31 32 41 42 43 CFC3C3C5BFAAB4CFB5E7D7D3 0d 0a 1b 40 1c 26 1d 42 01 30 31 32 41 42 43 CFC3C3C5BFAAB4CFB5E7D7D3 0d 0a

Turn underline mode on/off

Name	Turn underline mode on/off
Format	ASCII : ESC - n Decimal : 27 45 n HEX : 1B 2D n
Description	Turns underline mode on or off, based on the following values n:

n	Function
0, 48	Turns off underline mode
1, 49	Turns on underline mode (1 dot thick)
2, 50	Turns on underline mode (2 d ts thick)

Range	$0 \le n \le 2$, $48 \le n \le 50$

Default	n = 0
Support modal	All the printers
Note	The printer can underline all characters (including right-side character spacing), but cannot underline the space set by **HT.** The printer cannot underline 90 clockwise rotated characters and white/black inverted characters. When underline mode is turned off by setting the value of n to 0 or 48, the following data is not underlined, and the underline thickness set before the mode is turned off does not change. The default underline thickness is 1 dot. Changing the character size does not affect the current underline thickness. Underline mode can also be turned on or off by using **ESC !**. Note,
For example	1b 40 1c 26 1b 2d 01 30 31 32 41 42 43 B0 AE CE D2 D6 D0 BB AA 0D 0A 1b 40 1c 26 1b 2d 02 30 31 32 41 42 43 B0 AE CE D2 D6 D0 BB AA 0D 0A 1b 40 1c 26 1b 2d 00 30 31 32 41 42 43 B0 AE CE D2 D6 D0 BB AA 0D 0A

Turn 90° clockwise rotation mode on/off

Name	Turn 90 clockwise rotation mode on/off
Format	ASCII : ESC V n Decimal : 27 86 n HEX : 1B 56 n
Description	Turns 90 clockwise rotation mode on/off n is used as follows: **n** — **Function** 0,48 — Turns off 90 clockwise rotation mode 1,49 — Turns on 90 clockwise rotation mode
Range	$0 \le n \le 1$, $48 \le n \le 49$
Default	n = 0
Support modal	All the printers
Note	This command affects printing in standard mode. However, the setting is always effective. When underline mode is turned on, the printer does not underline 90 clockwise-rotated characters. Double-width and double-height commands in 90 rotation mode enlarge characters in the opposite directions from double-height and double- width commands in normal mode.
For example	1b 40 1c 26 1b 56 01 30 31 32 41 42 43 CFC3C3C5BFAAB4CFB5E7D7D3 0d 0a 1b 40 1c 26 1b 56 00 30 31 32 41 42 43 CFC3C3C5BFAAB4CFB5E7D7D3 0d 0a

Turn emphasized mode on/off

[Name] Turn emphasized mode on/off
[Format] ASCII ESC E n
Hex 1B 45 n
Decimal 27 69 n
[Range] 0 ≤ n ≤ 255
[Default] n = 0
[Description] • Turns emphasized mode on or off.
• When the LSB of n is 0, turns off emphasized mode.
• When the LSB of n is 1, turns on emphasized mode.

Turn double-strike mode on/off

[Name] Turn double-strike mode on/off
[Format] ASCII ESC G n
Hex 1B 47 n
Decimal 27 71 n
[Range] 0 ≤ n ≤ 255
[Default] n = 0
[Description] • Turns double-strike mode on or off.
• When the LSB of n is 0, turns off double-strike mode.
• When the LSB of n is 1, turns on double-strike mode.

Turn upside-down print mode on/off

[Name] Turn upside-down print mode on/off
[Format] ASCII ESC { n
Hex 1B 7B n
Decimal 27 123 n
[Range] 0 ≤ n ≤ 255
[Default] n = 0
[Description] • In standard mode, turns upside-down print mode on or off.
• When the LSB of n is 0, turns off upside-down print mode.
• When the LSB of n is 1, turns on upside-down print mode.

Select justification（Left justification、centering、Right justification）

<table>
<tr><td>Name</td><td>Select justification（left、center、right）</td></tr>
<tr><td>Format</td><td>ASCII ： ESC a n
Decimal ： 27 97 n
HEX ： 1B 61 n</td></tr>
<tr><td>Description</td><td>Aligns all the data in one line to the specified position.n selects the justification as follows:
<table>
<tr><th>n</th><th>Justification</th></tr>
<tr><td>0,48</td><td>Left justification</td></tr>
</table></td></tr>
</table>

		1, 49	Centering	
		2, 50	Right justification	
Range	0 ≤ n ≤ 2 or 48 ≤ n ≤ 50			
Default	n = 0			
Support modal	All the printers			
Note	ESC @,dump and restart,Reset the printer,This command setting failure.			
Example	1B 40 1B 61 02 30 31 32 0D 0A 1B 40 1B 61 01 30 31 32 0D 0A 1B 40 1B 61 00 30 31 32 0D 0A			

Select Chinese character mode

Name	Select Chinese character mode
Format	ASCII ： FS & Decimal ： 28 38 HEX ： 1C 26
Description	Selects Chinese character mode.
Range	
Default	
Support modal	All the printers
Note	For Chinese model: When the Chinese character mode is selected, the printer processes all Chinese code as two bytes each. Chinese codes are processed in the order of the first byte and second byte. Chinese character mode is not selected when the power is turned on.
For example	1b 40 1C 26 B0 AE C9 CF D7 D4 BC BA 0d 0a 1C 2E B0 AE C9 CF D7 D4 BC BA 0d 0a

Cancel Chinese character mode

Name	Cancel Chinese character mode
Format	ASCII ： FS . Decimal ： 28 46 HEX ： 1C 2E
Description	Cancel Chinese character mode
Range	
Default	
Support modal	All the printers
Note	For Chinese model: When the Chinese character mode is not selected, all character codes are processed one byte at a time as ASCII code. Chinese character mode is not selected when the power is turned on.

For example	

Select print mode(s) for Chinese characters

[Name] Select print mode(s) for Chinese characters

[Format] ASCII FS ! n

Hex 1C 21 n

Decimal 28 33 n

[Range] $0 \leq n \leq 255$

[Default] n = 0

[Description] • Selects the character styles (double-height, double-width, and Chinese-underlined) together for multi-byte code character.

(n) Bit	Off/On	Hex	Decimal	Function
0	—	—	—	Reserved.
1	—	—	—	Reserved.
2	Off	00	0	Double-width canceled.
	On	04	4	Double-width selected.
3	Off	00	0	Double-height canceled.
	On	08	8	Double-height selected.
4	—	—	—	Reserved.
5	—	—	—	Reserved.
6	—	—	—	Reserved.
7	Off	00	0	Underline mode is turned off.
	On	80	128	Underline mode is turned on.

Select an international character set

Name	Select an international character set
Format	ASCII ： ESC R n Decimal ： 27 82 n HEX ： 1B 52 n
Description	Selects international character set n from the following table:

n	**Character set**
0	U.S.A
1	France
2	Germany
3	U.K
4	Denmark I
5	Sweden
6	Italy
7	Spain I
8	Japan
9	Norway

		10	Denmark II
		11	Spain II
		12	Latin America
		13	Korea
		14	Slovenia/Croatia
		15	China
Range	0 ≤ n ≤ 15		
Default	0		
Support modal	All the printers		
Note			
For example	1B 40 1C 26 c3 c0 b9 fa 0d 0a 1B 40 1B 52 00 7b 23 24 40 5b 5c 5c 5d 5e 60 7b 7c 7d 7e 7d 0d 0a 1B 40 1C 26 B7 A8 B9 FA 0d 0a 1B 40 1B 52 01 7b 23 24 40 5b 5c 5c 5d 5e 60 7b 7c 7d 7e 7d 0d 0a 1B 40 1C 26 B5 C2 B9 FA 0d 0a 1B 40 1B 52 02 7b 23 24 40 5b 5c 5c 5d 5e 60 7b 7c 7d 7e 7d 0d 0a 1B 40 1C 26 D3 A2 B9 FA 0d 0a 1B 40 1B 52 03 7b 23 24 40 5b 5c 5c 5d 5e 60 7b 7c 7d 7e 7d 0d 0a 1B 40 1C 26 B5 A4 C2 F3 0d 0a 1B 40 1B 52 04 7b 23 24 40 5b 5c 5c 5d 5e 60 7b 7c 7d 7e 7d 0d 0a 1B 40 1C 26 C8 F0 B5 E4 0d 0a 1B 40 1B 52 05 7b 23 24 40 5b 5c 5c 5d 5e 60 7b 7c 7d 7e 7d 0d 0a 1B 40 1C 26 D2 E2 B4 F3 C0 FB 0d 0a 1B 40 1B 52 06 7b 23 24 40 5b 5c 5c 5d 5e 60 7b 7c 7d 7e 7d 0d 0a 1B 40 1C 26 CE F7 B0 E0 D1 C0 0d 0a 1B 40 1B 52 07 7b 23 24 40 5b 5c 5c 5d 5e 60 7b 7c 7d 7e 7d 0d 0a 1B 40 1C 26 C8 D5 B1 BE 0d 0a 1B 40 1B 52 08 7b 23 24 40 5b 5c 5c 5d 5e 60 7b 7c 7d 7e 7d 0d 0a 1B 40 1C 26 C5 B2 CD FE 0d 0a 1B 40 1B 52 09 7b 23 24 40 5b 5c 5c 5d 5e 60 7b 7c 7d 7e 7d 0d 0a 1B 40 B5 A4 C2 F3 32 0d 0a 1B 40 1B 52 0A 7b 23 24 40 5b 5c 5c 5d 5e 60 7b 7c 7d 7e 7d 0d 0a 1B 40 CE F7 B0 E0 D1 C0 32 0d 0a		

	1B 40 1B 52 0B 7b 23 24 40 5b 5c 5c 5d 5e 60 7b 7c 7d 7e 7d 0d 0a 1B 40 1C 26 C0 AD B6 A1 C3 C0 D6 DE 0d 0a 1B 40 1B 52 0C 7b 23 24 40 5b 5c 5c 5d 5e 60 7b 7c 7d 7e 7d 0d 0a 1B 40 1C 26 BA AB B9 FA 0d 0a 1B 40 1B 52 0D 7b 23 24 40 5b 5c 5c 5d 5e 60 7b 7c 7d 7e 7d 0d 0a 1B 40 1C 26 CB B9 C2 E5 CE C4 C4 E1 D1 C7 0d 0a 1B 40 1B 52 0E 7b 23 24 40 5b 5c 5c 5d 5e 60 7b 7c 7d 7e 7d 0d 0a 1B 40 1C 26 D6 D0 B9 FA 0d 0a 1B 40 1B 52 0F 7b 23 24 40 5b 5c 5c 5d 5e 60 7b 7c 7d 7e 7d 0d 0a

Select character code table

Name	Select character code table
Format	ASCII ： ESC t n Decimal ： 27 116 n HEX ： 1B 74 n
Description	n :select code page.

	N	**Code Page**	**N**	**Code Page**
	0	CP437 [U.S.A., Standard Europe]	26	Thai
	1	KataKana	27	CP720[Arabic]
	2	CP850 [Multilingual]	28	CP855
	3	CP860 [Portug ese]	29	CP857[Turkish]
	4	CP863 [Canadian-French]	30	WCP1250[Central Europe]
	5	CP865 [Nordic]	31	CP775
	6	WCP1251 [Cyrillic]	32	WCP1254[Turkish]
	7	CP866 Cyrilliec #2	33	WCP1255[Hebrew]
	8	MIK[Cyrillic /Bulgarian]	34	WCP1256[Arabic]
	9	CP755 [East Europe，Latvian 2]	35	WCP1258[Vietnam]
	10	Iran	36	ISO-8859-2[Latin 2]
	11	reserve	37	ISO-8859-3[Latin 3]
	12	reserve	38	ISO-8859-4[Baltic]
	13	reserve	39	ISO-8859-5[Cyrillic]
	14	reserve	40	ISO-8859-6[Arabic]
	15	CP862 [Hebrew]	41	ISO-8859-7[Greek]
	16	WCP1252 Latin I	42	ISO-8859-8[Hebrew]
	17	WCP1253 [Greek]	43	ISO-8859-9[Turkish]
	18	CP852 [Latina 2]	44	ISO-8859-15 [Latin 3]
	19	CP858 Multilingual Latin I+Euro)	45	Thai2
	20	Iran II	46	CP856
	21	Latvian	47	Cp874
	22	CP864 [Arabic]	255	GBK2312
	23	ISO-8859-1 [West Europe]		
	24	CP737 [Greek]		
	25	WCP1257 [Baltic]		
Range	0 ≤ n ≤ 255			
Default	0			
Support modal	All the printers			
Note				
For example	1B 40 1C 2E 1B 74 00 80 81 82 83 84 85 86 87 88 89 8A 8B 8C 8D 8E 8F 90 91 92 93 94 95 96 97 98 9A 9B 9C 9D 9E 9F A0 A1 A2 A3 A4 A5 A6 A7 A8 A9 AA AB AC AD AE AF B0 B1 B2 B3 B4 B5 B6 B7 B8 B9 BA BB BC BD BE BF C0 C1 C2 C3 C4 C5 C6 C7 C8 C9 CA CB CC CD CE CF D0 D1 D2 D3 D4 D5 D6 D7 D8 D9 DA DB DC DD DE DF E0 E1 E2 E3 E4 E5 E6 E7 E8 E9 EA EB EC ED EE EF F0 F1 F2 F3 F4 F5 F6 F7 F8 F9 FA FB FC FD FE FF 0D 0A			

③ Bit image command

Print MSB BITMAP

Name	Print MSB Bitmap
Format	ASCII : DC2 V nL nH [d1 … d48] Hex : 12 56 nL nH [d1 … d48] Decimal : 18 86 nL nH [d1 … d48]
Description	This command use to print MSB format bitmap, The width of bitmap must the same as the printer mechanism Bitmap height: nL+nH*256 Bitmap format: 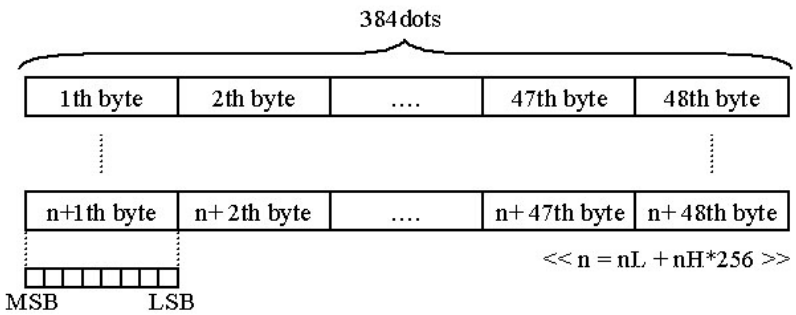
Range	
Default	
Support modal	All the printers
Note	
For example	12 56 01 00 FF FF FF FF FF FF FF FF FF FF FF FF FF FF FF FF FF FF FF FF FF FF FF FF FF FF FF FF FF FF FF FF FF FF FF FF FF FF FF FF FF FF FF FF FF FF FF FF FF FF

Print LSB bitmap

Name	Print LSB Bitmap
Format	ASCII : DC2 v nL nH [d1 … d48] Hex : 12 76 nL nH [d1 … d48] Decimal : 18 118 nL nH [d1 … d48]
Description	This command use to print LSB format bitmap, The width of bitmap must the same as the printer mechanism Bitmap height: nL+nH*256 Bitmap format:

	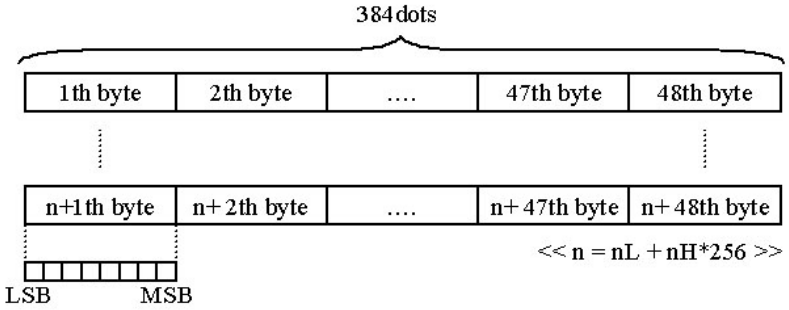
Range	
Default	
Support modal	All the printers
Note	
For example	

Select bit-image mode

Name	Select bit-image mode
Format	ASCII ： ESC * m Hl Hh [d]k Decimal ： 27 42 m Hl Hh [d]k HEX ： 1B 2A m Hl Hh [d]k
Description	Selects a bit-image mode using m for the number of dots specified by nL and nH, as follows: m mode **Horizontal Scale** **Vertical Scale** 0 8-dot single-density ×2 ×3 1 8-dot double-density ×1 ×3 32 24-dot single-density ×2 ×1 33 24-dot double-density ×1 ×1 Hl、Hh specifies the number of dots in the horizontal direction. （Hl＋256×Hh） [d]k is bit-image mode datas
Range	XX58： m = 0、1、32、33 1 ≤ Hl + Hh × 256 ≤ 384 0 ≤ d ≤ 255 k = Hl + Hh × 256（当 m = 0、1） k = (Hl + Hh × 256) × 3（当 m = 32、33） XX80： m = 0、1、32、33 1 ≤ Hl + Hh × 256 ≤ 576 0 ≤ d ≤ 255 k = Hl + Hh × 256（当 m = 0、1） k = (Hl + Hh × 256) × 3（当 m = 32、33）
Default	

Support modal	All the printers
Note	If the value of m is out of the specified range, nL and nH the data following are processed as normal data. The nL and nH indicate the number of dots in the bit image in the horizontal direction. The number of dots is calculated by nL + nH 256. If the bit-image data input exceeds the number of dots to be printed on a line, the excess data is ignored. d indicates the bit-image data. Set a corresponding bit to 1 to print a dot or to 0 not to print a dot. After printing a bit image, the printer returns to normal data processing mode. This command is not affected by print modes (emphasized, double-strike, underline, character size, or white/black reverse printing), except upside-down printing mode. The relationship between the image data and the dots to be printed is described in Figure 3.11.3. When 8-dot bit image is selected: 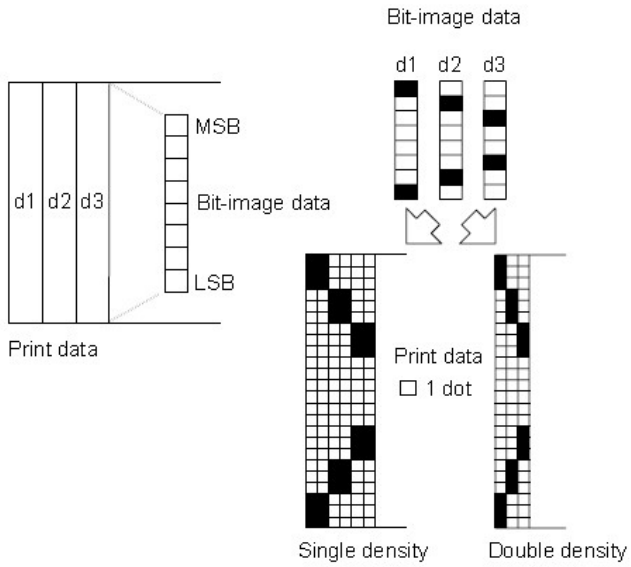 3.11.3 When 24-dot bit image is selected:

	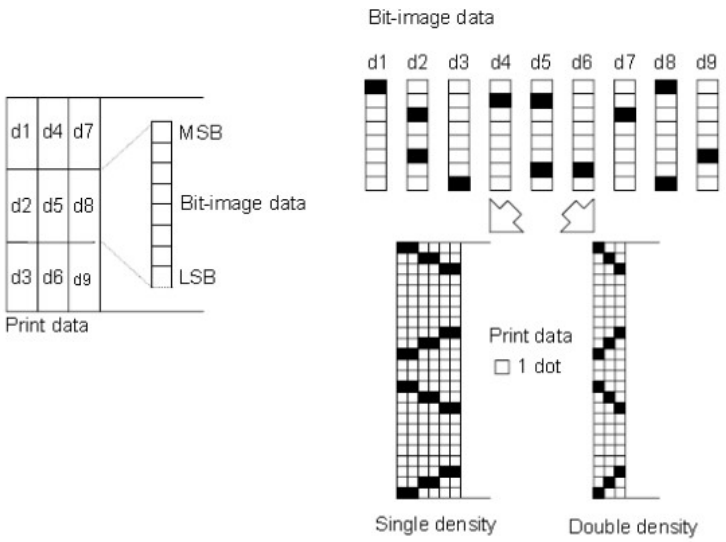 3.11.3
For example	1B 40 1b 2a 00 0C 00 FF FF FF FF FF FF FF FF FF FF FF FF 1B 33 00 0A

Define downloaded bit image

Name	Define downloaded bit image
Format	ASCII ： GS * x y d1...d(x×y×8) Decimal ： 29 42 x y d1 ...d(x×y×8) HEX ： 1D 2A x y d1...d(x×y×8)
Description	Defines a downloaded bit image using the number of dots specified by x and y. x specifies the number of dots in the horizontal direction. y specifies the number of dots in the vertical direction.
Range	$1 \le x \le 255$ $1 \le y \le 48$ $x*y \le 1536$ $0 \le d \le 255$
Default	
Support modal	All the printers
Note	If x×y is out of the specified range, this command is disabled. The d indicates bit-image data. Data (d) specifies a bit printed as 1 and not printed as 0. The downloaded bit image definition is cleared when: 1) ESC @ is executed. 2) ESC & is executed. 3) Printer is reset or the power is turned off. The following figure shows the relationship between the downloaded bit image and the printed data.

	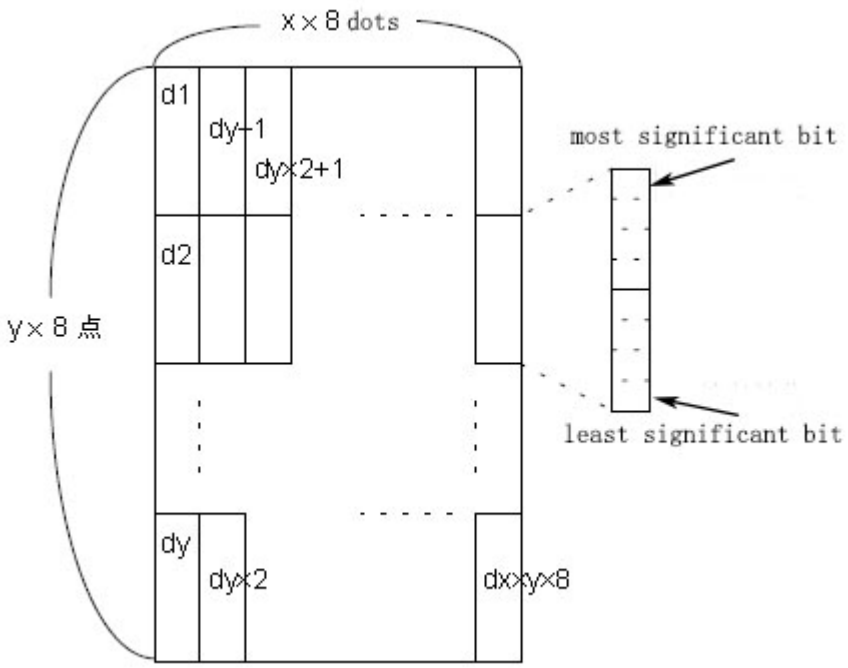
For example	1B 40 1D 2A 0a 08 ff 00 00 00 00 00 00 00 00 ff 00 00 00 00 00 00 00 00 ff 00 00 00 00 00 00 00 00 ff 00 00 00 00 00 00 00 00 ff 00 00 00 00 00 00 00 00 ff 00 00 00 00 00 00 00 00 ff 00 00 00 00 00 00 00 00 ff 00 00 00 00 00 00 00 00 ff 00 00 00 00 00 00 00 00 ff 00 00 00 00 00 00 00 ff 00 00 00 00 00 00 00 ff 00 00 00 00 00 00 00 ff 00 00 00 00 00 00 ff 00 00 00 00 00 00 ff 00 00 00 00 00 00 00 ff 00 00 00 00 00 00 00 ff 00 00 00 00 00 ff ff 00 00 00 00 00 00 00 00 ff 00 00 00 00 00 00 00 00 ff 00 00 00 00 00 00 00 00 ff 00 00 00 00 00 00 00 00 ff 00 00 00 00 00 00 00 00 ff 00 00 00 00 00 00 00 00 ff 00 00 00 00 00 00 00 00 ff 00 00 00 00 00 00 00 00 ff 00 00 00 00 00 00 00 ff 00 00 00 00 00 00 ff 00 00 00 00 00 00 00 ff 00 00 00 00 00 00 00 ff 00 00 00 00 00 00 ff 00 00 00 00 00 00 ff 00 00 00 00 00 00 00 ff 00 00 00 00 00 00 00 ff 00 00 00 00 ff ff 00 00 00 00 00 00 00 00 ff 00 00 00 00 00 00 00 00 ff 00 00 00 00 00 00 00 00 ff 00 00 00 00 00 00 00 00 ff 00 00 00 00 00 00 00 00 ff 00 00 00 00 00 00 00 00 ff 00 00 00 00 00 00 00 00 ff 00 00 00 00 00 00 00 00 ff 00 00 00 00 00 00 ff 00 00 00 00 00 00 ff 00 00 00 00 00 00 00 ff 00 00 00 00 00 00 00 ff 00 00 00 00 00 00 ff 00 00 00 00 00 00 ff 00 00 00 00 00 00 00 ff 00 00 00 00 00 00 00 ff 00 00 00 00 00 ff ff 00 00 00 00 00 00 00 00 ff 00 00 00 00 00 00 00 00 ff 00 00 00 00 00 00 00 00 ff 00 00 00 00 00 00 00 00 ff 00 00 00 00 00 00 00 00 ff 00 00 00 00 00 00 00 00 ff 00 00 00 00 00 00 00 00 ff 00 00 00 00 00 00 00 00 ff 00 00 00 00 00 00 ff 00 00 00 00 00 00 ff 00 00 00 00 00 00 00 00 ff 00 00 00 00 00 00 00 ff 00 00 00 00 00 00 ff 00 00 00 00 00 00 00 00 ff 00 00 00 00 00 00 00 00 ff 00 00 00 00 00 00 00 00 00 ff 00 00 00 00 00 00 00 00 ff 00 00 00 00 00 00 00 00 ff 00 00 00 00 00 00 00 ff 00 00 00 00 00 00 ff 00 00 00 00 00 00 00 ff 00 00 00 00 00 00 00 ff 00 00

	00 00 00 00 ff 00 00 00 00 00 00 ff 00 00 00 00 00 00 ff 00 00 00 00 00 00 ff 00 00 00 00 00 ff 1D 2F 03

Print downloaded bit image

Name	Print downloaded bit image
Format	ASCII ： GS / m Decimal ： 29 47 m HEX ： 1D 2F m
Description	Prints a downloaded bit image using the mode specified by m. m selects a mode from the table below: <table><tr><th>n</th><th>Mode</th></tr><tr><td>0, 48</td><td>Normal</td></tr><tr><td>1, 49</td><td>Double-width</td></tr><tr><td>2, 50</td><td>Double-height</td></tr><tr><td>3, 51</td><td>Quadruple</td></tr></table>
Range	0 ≤ m ≤ 3 48 ≤ m ≤ 51
Default	
Support modal	All the printers
Note	This command is ignored if a downloaded bit image has not been defined. In standard mode, this command is effective only when there is no data in the print buffer. This command has no effect in the print modes (emphasized, double-strike, underline, character size, or white/black reverse printing), except for upsidedown printing mode. If the downloaded bit-image to be printed exceeds the printable area, the excess data is not printed.
For example	

Define NV bit image

Name	Define NV bit image
Format	ASCII ： FS q n [xL xH yL yH d1...dk]1...[xL xH yL yH d1...dk]n Decimal ： 28 113 n [xL xH yL yH d1...dk]1...[xL xH yL yH d1...dk]n HEX ： 1C 71 n [xL xH yL yH d1...dk]1...[xL xH yL yH d1...dk]n
Description	Define the NV bit image specified by n. n specifies the number of the defined NV bit image. xL, xH specifies (xL xH 256) 8 dots in the horizontal direction for the NV bit image you are defining. yL, yH specifies (yL yH 256) 8 dots in the vertical direction for the NV bit image you are defining.
Range	1 ≤ n ≤ 255 0 ≤ xL ≤ 255

	0 ≤ xH ≤ 3 (1 ≤ (xL+xH*256) ≤ 1023) 0 ≤ yL ≤ 255） 0 ≤ yH ≤ 1 (1 ≤ (yL+yH*256) ≤ 288) 0 ≤ d ≤ 255） k = (xL+xH*256)*(yL+yH*256)*8 Total defined data area = 64K Bytes
Default	
Support modal	All the printers
Note	Frequent write command executions may damage the NV memory. Therefore, it is recommended to write the NV memory 10 times or less a day. The printer performs a hardware reset after the procedure to place the image into the NV memory. Therefore, user-defined characters, downloaded bit images should be defined only after completing this command. The printer clears the receive and print buffers and resets the mode to the mode that was in effect at power on. (this version is not support hardware reset) This command cancels all NV bit images that have already been defined by this command. From the beginning of the processing of this command till the finish of hardware reset, mechanical operations (including initializing the position of the print head when the cover is open, paper feeding using the FEED button, etc.) cannot be performed. During processing of this command, the printer is BUSY when writing data to the user NV memory and stops receiving data. Therefore it is prohibited to transmit the data, including real-time commands, during the execution of this command. NV bit image is a bit image defined in non-volatile memory by FS q and printed by FS p. In standard mode, this command is effective only when processed at thebeginning of the line. This command is effective when 7 bytes <FS yH> of the command areprocessed normally. When the amount of data exceeds the capacity left in the range defined by xL, xH, yL, yH, the printer processes xL, xH, yL, yH out of the defined range. In the first group of NV bit images, when any of the parameters xL, xH, yL, yH is out of the definition range, this command is disabled. In groups of NV bit images other than the first one, when the printer encounters xL, xH, yL, yH out of the defined range, it stops processing this command and starts writing into the NV images. At this time, NV bit images that haven't been defined are disabled (undefined), but any NV bit images before that are enabled. The d indicates the definition data. In data (d) a 1 bit specifies a dot to be printed and a 0 bit specifies a dot not to be printed.

	This command defines n as the number of a NV bit image. Numbers rise in order from NV bit image 01H. Therefore, the first data group [xL xH yL yH d1...dk] is NV bit image 01H, and the last data group [xL xH yL yH d1...dk] is NV bit image n. The total agrees with the number of NV bit images specified by the command FS p. The definition data for an NV bit image consists of [xL xH yL yH d1...dk]. Therefore, when only one NV bit image is defined n=1, the printer processes a data group [xL xH yL yH d1...dk] once. The printer uses ([data: (xL xH× 256)×(yL yH× 256)×8] [header :4]) bytes of NV memory. The definition area in this printer is a maximum of 192K bytes. This command can define several NV bit images, but cannot define bit image data whose total capacity [bit image data header] exceeds 192K bytes. The printer does not transmit ASB status or perform status detection during processing of this command even when ASB is specified. Once an NV bit image is defined, it is not erased by performing ESC @, reset, and power off. This command performs only definition of an NV bit image and does not perform printing. Printing of the NV bit image is performed by the FS pcommand. **For example :** xL = 64, xH = 0, yL = 96, yH = 0

	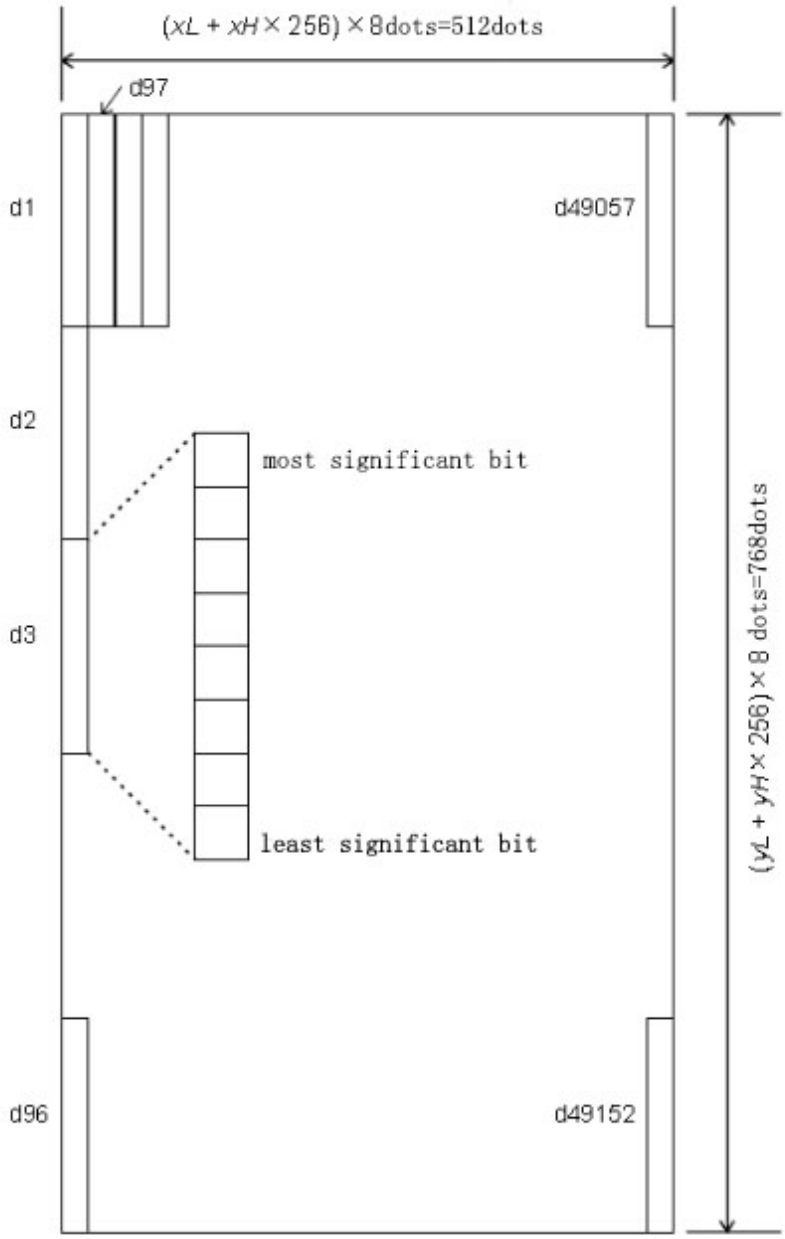
For example	1B 40 1C 71 01 10 00 08 00 ff ff ff ff ff ff ff ff ff ff ff ff ff ff ff ff ff ff ff ff ff ff ff ff ff ff ff ff ff ff ff ff ff ff ff ff ff ff ff ff ff ff ff ff ff ff ff ff ff ff ff ff ff ff ff ff ff ff ff ff ff ff ff ff ff ff ff ff ff ff ff ff ff ff ff ff ff ff ff ff ff ff ff ff 00 00 00 00 ff ff ff ff 00 00 00 00 ff ff ff ff 00 00 00 00 ff ff ff ff 00 00 00 00 ff ff ff ff 00 00 00 00 ff ff ff ff 00 00 00 00 ff ff ff ff 00 00 00 00 ff ff ff ff 00 00 00 00 ff ff ff ff 00 00 00 00 ff ff ff ff 00 00 00 00 ff ff ff ff 00 00 00 00 ff ff ff ff 00 00 00 00 ff ff ff ff ff ff ff ff ff ff ff ff ff ff ff ff ff ff ff ff ff ff ff ff ff ff ff ff ff ff ff ff ff ff ff ff ff ff ff ff ff ff ff ff ff ff ff ff ff ff ff ff ff ff ff ff ff ff ff ff ff ff ff ff ff ff ff ff ff ff ff ff ff ff ff ff ff ff ff ff ff ff ff ff ff ff ff ff ff ff ff ff ff ff ff 00 00 00 00 ff ff ff ff 00 00 00 00 ff ff ff ff 00 00 00 00 ff ff ff ff 00 00 00 00 ff ff ff ff 00 00 00 00 ff ff ff ff 00 00 00 00 ff ff ff ff 00 00 00 00 ff ff ff ff 00 00 00 00 ff ff ff ff 00 00 00 00 ff ff ff ff 00 00 00 00 ff ff ff ff 00 00 00 00 ff ff ff

	ff 00 00 00 00 ff ff ff ff ff ff ff ff ff ff ff ff ff ff ff ff ff ff ff ff ff ff ff ff ff ff ff ff ff ff ff ff ff ff ff ff ff ff ff ff ff ff ff ff ff ff ff ff ff ff ff ff ff ff ff ff ff ff ff ff ff ff ff ff ff ff ff ff ff ff ff ff ff ff ff ff ff ff ff ff ff ff ff ff ff ff ff ff ff ff ff ff ff ff ff ff ff ff ff ff 00 00 00 00 ff ff ff ff 00 00 00 00 ff ff ff ff 00 00 00 00 ff ff ff ff 00 00 00 00 ff ff ff ff 00 00 00 00 ff ff ff ff 00 00 00 00 ff ff ff ff 00 00 00 00 ff ff ff ff 00 00 00 00 ff ff ff ff 00 00 00 00 ff ff ff ff 00 00 00 00 ff ff ff ff 00 00 00 00 ff ff ff ff 00 00 00 00 ff ff ff ff ff ff ff ff ff ff ff ff ff ff ff ff ff ff ff ff ff ff ff ff ff ff ff ff ff ff ff ff ff ff ff ff ff ff ff ff ff ff ff ff ff ff ff ff ff ff ff ff ff ff ff ff ff ff ff ff ff ff ff ff ff ff ff ff ff ff ff ff ff ff ff ff ff ff ff ff ff ff ff ff ff ff ff ff ff ff ff ff ff ff ff ff ff ff ff ff 00 00 00 00 ff ff ff ff 00 00 00 00 ff ff ff ff 00 00 00 00 ff ff ff ff 00 00 00 00 ff ff ff ff 00 00 00 00 ff ff ff ff 00 00 00 00 ff ff ff ff 00 00 00 00 ff ff ff ff 00 00 00 00 ff ff ff ff 00 00 00 00 ff ff ff ff 00 00 00 00 ff ff ff ff 00 00 00 00 ff ff ff ff 00 00 00 00 ff ff ff ff ff ff ff ff ff ff ff ff ff ff ff ff ff ff ff ff ff ff ff ff ff ff ff ff ff ff ff ff ff ff ff ff ff ff ff ff ff ff ff ff ff ff ff ff ff ff ff ff ff ff ff ff ff ff ff ff ff ff ff ff ff ff ff ff ff ff ff ff ff ff ff ff ff ff ff ff ff ff ff ff ff ff ff ff ff ff ff ff ff ff ff ff ff ff ff ff 00 00 00 00 ff ff ff ff 00 00 00 00 ff ff ff ff 00 00 00 00 ff ff ff ff 00 00 00 00 ff ff ff ff 00 00 00 00 ff ff ff ff 00 00 00 00 ff ff ff ff 00 00 00 00 ff ff ff ff 00 00 00 00 ff ff ff ff 00 00 00 00 ff ff ff ff 00 00 00 00 ff ff ff ff 00 00 00 00 ff ff ff ff 00 00 00 00 ff ff ff ff ff ff ff ff ff ff ff ff ff ff ff ff ff ff ff ff ff ff ff ff ff ff ff ff ff ff ff ff ff ff ff ff ff ff ff ff ff ff ff ff ff ff ff ff ff ff ff ff ff ff ff ff ff ff ff ff ff ff ff ff ff ff ff ff ff ff ff ff ff ff ff ff ff ff ff ff ff ff ff ff 1C 70 01 00

Print NV bit image

Name	Print NV bit image
Format	ASCII ： FS p n m Decimal ： 28 112 n m HEX ： 1C 70 n m
Description	Prints NV bit image n using the mode specified by m. <table><tr><td>m</td><td>Mode</td></tr><tr><td>0，48</td><td>Normal</td></tr><tr><td>1，49</td><td>Double-width</td></tr><tr><td>2，50</td><td>Double-height</td></tr><tr><td>3，51</td><td>Quadruple</td></tr></table>
Range	$0 \leq m \leq 3$ $48 \leq m \leq 51$ $1 \leq n \leq 255$
Default	
Support modal	All the printers
Note	NV bit image is a bit image defined in non-volatile memory by **FS q** and printed by **FS p**. This command is not effective when the specified NV bit image has not been defined. In standard mode, this command is effective only when there is no data in the

	print buffer. This command is not affected by print modes (emphasized, underline, character size, white/black reverse printing, or 90 rotated characters, etc.), except upside-down printing mode. If the downloaded bit-image to be printed exceeds one line, the excess data is not printed. This command feeds dots (for the height n of the NV bit image) in normal and double-width modes, and (for the height n 2 of the NV bit image) in doubleheight and quadruple modes, regardless of the line spacing specified by **ESC 2** or **ESC 3**. After printing the bit image, this command sets the print position to the beginning of the line and processes the data that follows as normal data.
For example	

Print raster bit image

[Name] Print raster bit image

[Format] ASCII GS v 0 m x L x H y L y H d1...dk

Hex 1D 76 30 m x L x H y L y H d1...dk

Decimal 29 118 48 m x L x H y L y H d1...dk

[Range] $0 \le m \le 3$, $48 \le m \le 51$

$1 \le (x L + x H \times 256) \le 65535$ ($0 \le x L \le 255$, $0 \le x H \le 255$)

$1 \le (y L + y H \times 256) \le 2303$ ($0 \le y L \le 255$, $0 \le y H \le 8$)

$0 \le d \le 255$

$k = (x L + x H \times 256) \times (y L + y H \times 256)$

[Description] • Prints a raster bit image using the mode specified by m.

m	Mode	Vertical direction（DPI）	Horizontal direction（DPI）
0,48	Normal	200	200
1,49	Double-width	200	100
2,50	Double-height	100	200
3,51	Quadruple	100	100

• x L , x H specify the number of bytes in the horizontal direction as (x L + x H × 256).

• y L , y H specify the number of dots in the vertical direction as (y L + y H × 256).

• d specifies the defined data (raster format).

④ Tab command

Horizontal tab

Name	Horizontal tab
Format	ASCII ： HT Decimal ： 9 HEX ： 09
Description	Moves the print position to the next horizontal tab position.
Range	
Default	
Support modal	All the printers
Note	This command is ignored unless the next horizontal tab position has been set. If the next horizontal tab position exceeds the printing area, the printer sets the printing position to [printing area width + 1]. Horizontal tab positions are set with ESC D. If this command is received when the printing position is at [printing area width + 1], the printer executes print buffer-full printing of the current line and horizontal tab processing from the beginning of the next line.
For example	

Set horizontal tab positions

Name	Set horizontal tab positions
Format	ASCII ： ESC D [d]k NUL Decimal ： 27 68 [d]k 0 HEX ： 1B 44 [d]k 00
Description	Sets horizontal tab positions. d[k] specifies the column number for setting a horizontal tab position from the beginning of the line. k indicates the total number of horizontal tab positions to be set. NULL is end mark.
	XX58：$1 \le d \le 46$（d1 <d2 < …… dk ， $1 \le k \le 16$） XX80：$1 \le d \le 70$（d1 < d2 < …… dk ， $1 \le k \le 16$）
Default	[d]k = 0
Support modal	All the printers
Note	Set the Tab position:

	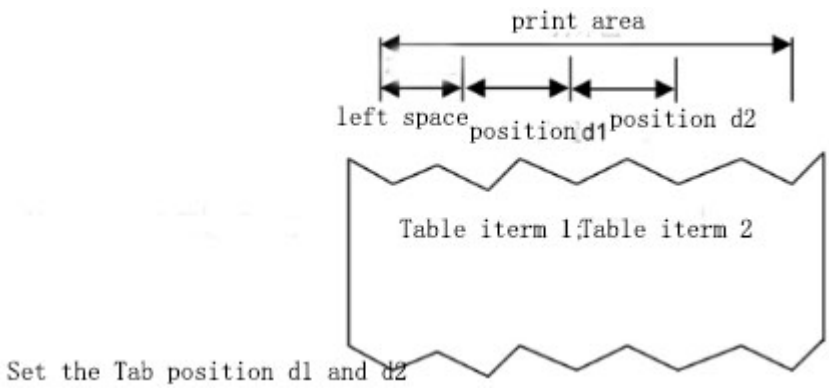 The horizontal tab position is stored as a value of [character width n] measured from the beginning of the line. The character width includes the right-side character spacing, and double-width characters are set with twice the width of normal characters. This command cancels the previous horizontal tab settings. When setting n = 8, the print position is moved to column 9 by sending HT. Up to 16 tab positions (k = 16) can be set. Data exceeding 16 tab positions is processed as normal data. Transmit [n]k in ascending order and place a NUL code 0 at the end. When [n]k is less than or equal to the preceding value [n]k-1, tab setting is finished and the following data is processed as normal data. ESC D NUL cancels all horizontal tab positions. The previously specified horizontal tab positions do not change, even if the character width changes. The character width is memorized for each standard mode.
For example	1B 40 1C 26 1B 44 10 18 00 B1 E0 BA C5 09 C3 FB B3 C6 09 BC DB B8 F1 28 D4 AA 29 0D 0A 1B 44 10 18 00 31 09 B0 D7 B2 CB 09 31 2E 35 0D 0A 1B 44 10 18 00 32 09 C7 D1 D7 D3 09 32 0D 0A 1B 44 10 18 00 33 09 B6 B9 D1 BF 09 31 0D 0A

⑤ Bar code command

Select printing position for HRI characters

Name	Select printing position for HRI characters
Format	ASCII：GS H n Decimal：29 72 n HEX：1D 48 n
Description	Selects the printing position of HRI characters when printing a bar code. n

	selects the printing position as follows: **n** — **Printing position** 0, 48 — Not printed 1, 49 — Above the bar code 2, 50 — Below the bar code 3, 51 — Both above and below the bar code
Range	0 ≤ n ≤ 3 or 48 ≤ n ≤ 51
Default	n = 0
Support modal	All the printers
Note	ESC @,dump and restart,Reset the printer,This command setting failure.
For example	

Select bar code height

Name	Select bar code height
Format	ASCII ： GS h n Decimal ： 29 104 n HEX ： 1D 68 n
Description	Selects the height of the bar code. n specifies the number of dots in the vertical direction. 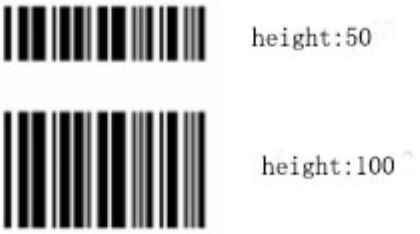
Range	1 ≤ n ≤ 255
Default	n = 64
Support modal	All the printers
Note	ESC @,dump and restart,Reset the printer,This command setting failure.
For example	

Set bar code width

Name	Set bar code width
Format	ASCII ： GS w n Decimal ： 29 119 n HEX ： 1D 77 n
Description	Set bar code width unit to n， Parameters n meaning as follow：

	width:3 width:4
Range	1 ≤ n ≤ 6
Default	n = 2
Support modal	All the printers
Note	ESC @,dump and restart,Reset the printer,This command setting failure.
For example	

Print bar code

Name	Print bar code
Format	**(A)** ASCII : GS k m [d]k NUL Decimal : 29 107 m [d]k NUL HEX : 1D 6B m [d]k NUL **(B)** ASCII : GS k m n [d]k Decimal : 29 107 m n [d]k HEX : 1D 6B m n [d]k
Description	Selects a bar code system and prints the bar code. m selects a bar code system as follows:

m		Bar Code System	Number of Characters	Remarks
①	0	UPC-A	11 k 12	48 d 57
	1	UPC-E	11 k 12	48 d 57
	2	JAN13 (EAN13)	12 k 13	48 d 57
	3	JAN 8 (EAN8)	7 k 8	48 d 57
	4	CODE39	1 k′	48 d 57, 65 d 90, 32, 36, 37, 43, 45, 46, 47
	5	ITF	1 k (even number)	48 d 57
	6	CODABAR	1 k′	48 d 57, 65 d 68 , 36, 43, 45, 46, 47, 58
②	65	UPC-A	11 n 12	48 d 57
	66	UPC-E	11 n 12	48 d 57
	67	JAN13 (EAN13)	12 n 13	48 d 57
	68	JAN 8 (EAN8)	7 n 8	48 d 57
	69	CODE39	1 n 255	48 d 57, 65 d 90, 32, 36, 37, 43, 45, 46, 47
	70	ITF	1 n 255 (even number)	48 d 57
	71	CODABAR	1 n 255	48 d 57, 65 d 68 , 36, 43, 45, 46, 47, 58
	72	CODE93	1 n 255	0 d 127
	73	CODE128	2 n 255	0 d 127

[Notes for ①]

This command ends with a NUL code.

When the bar code system used is UPC-A or UPC-E, the printer prints the bar code data after receiving 12 bytes of bar code data and processes the following data as normal data.

When the bar code system used is JAN13 (EAN13), the printer prints the bar code after receiving 13 bytes of bar code data and processes the following data as normal data.

When the bar code system used is JAN8 (EAN8), the printer prints the bar

code after receiving 8 bytes of bar code data and processes the following data as normal data.

The number of data for the ITF bar code must be even numbers. When an odd number of bytes of data is input, the printer ignores the last received data.

[Notes for ②]

n indicates the number of bar code data bytes, and the printer processes n bytes from the next character data as bar code data.

If n is outside the specified range, the printer stops command processing and processes the following data as normal data.

[Notes in standard mode]

If d is outside the specified range, the printer only feeds paper and processes the following data as normal data.

If the horizontal size exceeds printing area, the printer only feeds the paper.

This command feeds as much paper as is required to print the bar code,regardless of the line spacing specified by ESC 2 or ESC 3.

This command is enabled only when no data exists in the print buffer.When data exists in the print buffer, the printer processes the data following m as normal data.

After printing the bar code, this command sets the print position to the beginning of the line.

This command is not affected by print modes (emphasized, double-strike,underline, character size, white/black reverse printing, or 90 rotated character, etc.), except for upside-down printing mode.

[Example] Printing GS k 72 7 67 111 100 101 13 57 51

Control character				**Control character**			
ASCII	**Hex**	**Decimal**	**HRI character**	**ASCII**	**Hex**	**Decimal**	**HRI character**
NUL	00	0	■U	DEL	10	16	■P
SOH	01	1	■A	DC1	11	17	■Q
STX	02	2	■B	DC2	12	18	■R
ETX	03	3	■C	DC3	13	19	■S
EOT	04	4	■D	DC4	14	20	■T
ENQ	05	5	■E	NAK	15	21	■U
ACK	06	6	■F	SYN	16	22	■V
BEL	07	7	■G	ETB	17	23	■W
BS	08	8	■H	CAN	18	24	■X
HT	09	9	■I	EM	19	25	■Y
LF	0A	10	■J	SUB	1A	26	■Z
VT	0B	11	■K	ESC	1B	27	■A
FF	0C	12	■L	FS	1C	28	■B
CR	0D	13	■M	GS	1D	29	■C
SO	0E	14	■N	RS	1E	30	■D
SI	0F	15	■O	US	1F	31	■E
				DEL	7F	127	■T

Range	(A) 0 ≤ m ≤ 6 (B) 65 ≤ m ≤ 74
Default	
Support modal	All the printers
Note	
For example	1b 40 1d 48 02 1d 68 64 1d 77 03 30 0D 0A 1d 6b 00 30 31 32 33 34 35 36 37 38 39 31 00 31 0D 0A 1d 6b 01 30 31 32 33 34 35 36 37 38 39 31 00 32 0D0A 1d 6b 02 30 31 32 33 34 35 36 37 38 39 31 32 00 33 0D 0A 1d 6b 03 30 31 32 33 34 35 36 37 00 34 0D 0A 1D 6B 04 30 31 32 41 42 20 24 25 2B 2D 2E 2F 00 35 0D 0A 1d 6b 05 30 31 32 33 34 35 36 37 38 39 31 32 00 36 0D 0A 1d 6b 06 2D 31 32 42 24 2B 2D 2E 00 1d 6b 06 43 31 32 33 34 35 36 34 38 39 00 36 35 0D 0A 1d 6b 41 0c 31 32 33 34 35 36 37 38 39 30 31 32 36 36 0D 0A 1d 6b 42 0c 30 32 33 34 35 36 30 30 30 30 38 39 36 37 0D 0A 1d 6b 43 0c 30 32 33 34 35 36 30 30 30 30 38 39 36 38 0D 0A 1d 6b 44 08 30 32 33 34 35 36 30 30 36 39 20 20 4e 4f 20 24 25 2b 2d 2e 2f 31 32 33 34 35 36 30 30 0D 0A 1d 6b 45 11 4e 4f 20 24 25 2b 2d 2e 2f 31 32 33 34 35 36 30 30 37 30 20 20 20 30 32 33 34 35 36 30 30 C5 BC CA FD 0D 0A 1d 6b 46 09 30 31 32 33 34 35 36 30 30 37 31 0d 0a 1d 6b 47 05 32 33 34 35 36 37 32 0d 0a 1d 6b 48 0b 32 33 34 35 36 41 42 2e 2f 2b 2c 37 33 0d0a 1d 6b 49 0A 7B 42 4E 6F 2E 7B 43 0C 22 38

⑥ QR CODE COMMAND

Set the model type

Name	Set the model type
Format	ASCII ： GS (k pL pH cn fn n Decimal ： 29 40 107 pL pH cn fn n HEX ： 1D 28 6b pL pH cn fn n
Description	Set the model type
Range	pL=3, pH=0 cn=49 fn=67 0 ≤ n ≤ 16
Default	n=3
Support modal	All the printers
Note	Set the QR code size of the smallest unit of graphics module[n dots× n dots].
For example	

Set the QR code error correction level error (ECC)

Name	Set the QR code error correction level error (ECC)
Format	ASCII ： GS (k pL pH cn fn n Decimal：29 40 107 pL pH cn fn n HEX ： 1D 28 6b pL pH cn fn n
Description	Set the QR code error correction level error
Range	pL=3, pH=0 cn=49 fn=69 48 ≤ n ≤ 51
Default	n=48
Support modal	All the printers
Note	Set the QR code error correction level error
For example	

n	function	The general proportion of recovery (%)
48	Error correction level L	7
49	Error correction level m	15
50	Error correction level q	25
51	Error correction level h	30

Set the QR code graphic data

Name	Set the QR code graphic data
Format	ASCII ： GS (k pL pH cn fn m d1…dk

	Decimal ： 29 40 107 pL pH cn fn m d1…dk HEX ： 1D 28 6b pL pH cn fn m d1…dk
Description	Set the QR code graphic data.
Range	4 ≤ (pL + pH×256) ≤ 7092 (0 ≤ pL ≤ 255, 0 ≤ pH ≤ 28) cn=49 fn=80 m=48 0 ≤ d ≤ 255 k = (pL + pH×256) - 3
Default	
Support modal	All the printers
Note	Set the QR code graphic data(d1...dk)to QR code buffer. (d1...dk) （(pL + pH×256)-3）Byte as a graphic data is processed.
For example	

Print store QR codes graphics

Name	Print store QR codes graphics
Format	ASCII ： GS (k pL pH cn fn m Decimal ： 29 40 107 pL pH cn fn m HEX ： 1D 28 6b pL pH cn fn m
Description	Print store QR codes graphics
Range	pL=3, pH=0 cn=49 fn=81 m=48
Default	
Support modal	All the printers
Note	Print store QR codes graphics. The user must consider QR code graphic space（QR code graphics about spacing and the spacing of up and down）.
For example	1b 40 1d 28 6b 03 00 31 43 03 1d 28 6b 03 00 31 45 30 1d 28 6b 06 00 31 50 30 41 42 43 1b 61 01 1d 28 6b 03 00 31 52 30 1d 28 6b 03 00 31 51 30

⑦ STATUS COMMAND

Transmit status

Name	Transmit status
Format	ASCII ： GS r n Decimal ： 29 114 n

	HEX ： 1D 72 n
Description	Transmits the status specified by n as follows: n | **Function** 1.49 | Transmits paper sensor status
Range	n = 1, 49
Default	
Support modal	All the printers
Note	When using a serial interface When DTR/DSR control is selected, the printer transmits only 1 byte after confirming the host is ready to receive data (DSR signal is SPACE). If the host computer is not ready to receive data (DSR signal is MARK), the printer waits until the host is ready. When XON/XOFF control is selected, the printer transmits only 1 byte without confirming the condition of the DSR signal. This command is executed when the data in the receive buffer is developed. Therefore, there may be a time lag between receiving this command and transmitting the status, depending on the receive buffer status. When Auto Status Back (ASB) is enabled using GS a, the status transmitted by GS r and the ASB status must be differentiated using. The status types to be transmitted are shown below:

Bit	Off/On	Hex	Decimal	Status for ASB
0,1	-	-	-	Undefined.
2,3	Off	00	0	Paper roll end sensor: paper adequate.
	On	(0C)	(12)	Paper roll end sensor: paper near end.
4	Off	00	0	Not used. Fixed to Off.
5,6	-	-	-	Undefined.
7	Off	00	0	Not used. Fixed to Off.

Paper sensor status (n = 1, 49):

Bits 2 and 3: When the paper end sensor detects a paper end, the printer goes offline and does not execute this command. Therefore, bits 2 and 3 do not transmit the status of paper end.

For example	

Real-time transmission status

Name	Real-time transmission status
Format	ASCII ： DLE EOT n Decimal ： 16 4 n HEX ： 10 04 n
Description	n = 1： printer status n = 2： send offline status

	n = 3：Transmission error status n = 4：Transmission paper sensor status
Range	1 ≤ n ≤ 4
Default	
Support modal	All the printers
Note	

n=1：printer status

bit	0/1	HEX	Decimal	Function
0	0	00	0	0
1	1	02	2	1
2	0	00	0	Open one or two cash drawer （No cash drawer is fixed to 0）
	1	04	4	Close cash drawer
3	0	00	0	On-line
	1	08	8	Off-line
4	1	10	16	1
5, 6		--	--	Undefined
7	0	00	00	The paper has been torn away
	1	80	96	Paper not to tear away

n=2：send offline status

位	0/1	HEX	Decimal	function
0	0	00	0	0
1	1	02	2	1
2	0	00	0	Close paper warehouse
	1	04	4	Open paper warehouse
3	0	00	0	Not push Feed button
	1	08	8	Push feed button
4	1	10	16	1
5	0	00	0	Paper normal
	1	20	32	Paper out
6	0	00	00	Normal status
	1	40	64	Error status
7	0	00	0	0

n=3：Transmission error status

bit	0/1	HEX	Decimal	function
0	0	00	0	0
1	1	02	2	1
2		--	--	Undefined
3	0	00	0	cutter normal
	1	08	8	Cutter error

4	1	10	16	1
5	0	00	0	Unrecoverable Error
	1	20	32	Unrecoverable Error
6	0	00	00	Print head temperature and voltage are normal
	1	40	64	Print head temperature and voltage are over range.
7	0	00	0	0

n=4：Transmission paper sensor status

bit	0/1	HEX	Decimal	Function
0	0	00	0	0
1	1	02	2	1
2，3	0	00	0	normal status
	1	0C	12	paper will out
4	1	10	16	1
5，6	0	00	0	normal status
	1	60	96	Paper out
7	0	00	0	0

For example

10 04 01
10 04 02
10 04 03
10 04 04

Send real-time request to printer

[Name] Send real-time request to printer

[Format] ASCII DLE ENQ n
Hex 10 05 n
Decimal 16 5 n

[Range] n = 1, 2

[Description] • Responds to a request in real-time from the host PC.

n	Function
1	Recovers from a recoverable error and restarts printing from the line where the error occurred.
2	Recovers from a recoverable error after clearing the receive and print buffers. • This command is ignored unless a recoverable error has occurred.

[Notes] • Use this command after removing the cause of the error.

• Take the following into consideration:

• If the received data includes a data string matching this command, the printer performs the command. Users must consider this.

Example: Graphic data might accidentally include a data string matching this command.

• Do not embed this command within another command.

Example: Graphic data might include this command.

Enable/Disable Automatic Status Back (ASB)

<table>
<tr><td>Name</td><td>Enable/Disable Automatic Status Back (ASB)</td></tr>
<tr><td>Format</td><td>ASCII : GS a n
Decimal : 29 97 n
HEX : 1d 61 n</td></tr>
<tr><td>Description</td><td>When ASB is enabled, the printer will send the changed status to PC automatically.
<table>
<tr><td>bit</td><td>off/on</td><td>HEX</td><td>Decimal</td><td>ASB status</td></tr>
<tr><td>0</td><td>-</td><td>-</td><td>-</td><td>Undefined</td></tr>
<tr><td>1</td><td>-</td><td>-</td><td>-</td><td>Undefined</td></tr>
<tr><td>2</td><td>off</td><td>00</td><td>0</td><td>error status prohibition</td></tr>
<tr><td></td><td>on</td><td>04</td><td>4</td><td>Error status allows</td></tr>
<tr><td>3</td><td>off</td><td>00</td><td>0</td><td>Paper sensor status prohibition</td></tr>
<tr><td></td><td>on</td><td>08</td><td>8</td><td>Paper sensor status allows</td></tr>
<tr><td>4-7</td><td>-</td><td>-</td><td>-</td><td>Undefined</td></tr>
</table></td></tr>
<tr><td>Range</td><td>0≤n≤255</td></tr>
<tr><td>Default</td><td></td></tr>
<tr><td>Support modal</td><td>All the printers</td></tr>
<tr><td>Note</td><td></td></tr>
<tr><td>For example</td><td>1D 61 08</td></tr>
</table>

Set the process ID response

[Name] Set the process ID response

[Format] ASCII GS (H p L p H fn m d1 d2 d3 d4

Hex 1D 28 48 p L p H fn m d1 d2 d3 d4

Decimal 29 40 72 p L p H fn m d1 d2 d3 d4

[Range] (p L + p H × 256) = 6 (p L =6, p H = 0)

fn = 48

m = 48

32 ≤ d ≤ 126

[Description] • Saves the process ID specified by (d1, d2, d3, d4) for the data processed immediately before this function.

⑧ Other command

Initialize printer

Name	Initialize printer
Format	ASCII：ESC @ Decimal：27 64 HEX：1B 40
Description	Clears the data in the print buffer and resets the printer mode to the mode that was in effect when the power was turned on.
Range	
Default	
Support modal	All the printers
Note	
For example	

Printing test paper

Name	Printing test paper
Format	ASCII：DC2 T Decimal：18 94 HEX：12 54
Description	Printing test page
Range	
Default	
Support modal	All the printers
Note	
For example	1B 40 12 54

Select cut mode and cut paper

[Name] Select cut mode and cut paper

[Format] <A> ASCII GS V m

Hex 1D 56 m

Decimal 29 86 m

<B> ASCII GS V m n

Hex 1D 56 m n

Decimal 29 86 m n

[Range] <A> m = 0, 1, 48, 49

<B> m = 65, 66, 0 ≤ n ≤ 255

[Description] • Executes paper cutting specified by m.

m		Paper cutting patterns
<A>	0, 48	Full-cut
	1, 49	Semi-cut
<B>	65, 66	Feeds paper to (cutting position + [n × (vertical motion unit)]) and cuts the paper.

[Note] • This printer executes a partial cut (one point left uncut).

Partial cut (one point left uncut)

[Name] Partial cut (one point left uncut)
[Format] ASCII ESC i
Hex 1B 69
Decimal 27 105
[Description] • Executes a partial cut of the roll paper.
[Note] • This printer executes a partial cut (one point left uncut).

Partial cut (three points left uncut)

[Name] Partial cut (three points left uncut)
[Format] ASCII ESC m
Hex 1B 6D
Decimal 27 109
[Description] • Executes a partial cut of the roll paper.
[Note] • This printer executes a partial cut (one point left uncut).

Set the print concentration

Name	Set the print concentration
Format	ASCII：ESC 7 n1 n2 n3 Decimal：27 55 n1 n2 n3 HEX：1B 37 n1 n2 n3
Description	Set “max heating dots”,”heating time”, “heating interval” ; • n1 = 0-255 Max printing dots，Unit(8dots)，Default:9(80 dots); • n2 = 3-255 Heating time，Unit(10us),Default:80(800us); • n3 = 0-255 Heating interval,Unit(10us)，Default:2(20us); The more max heating dots, the more peak current will cost when printing, the faster printing speed. The max heating dots is 8*(n1+1); The more heating time, the more density , but the slower printing speed. If heating time is too short, blank page may occur. The more heating interval, the more clear, but the slower printing speed.
Range	
Default	
Support modal	All the printers
Note	‘heating time’、’heating interval’ PCB will automatically adjust according to the input voltage
For example	Heating dots：80dots，heating time：800us，heating interval：200us。 1B 40 1B 37 09 50 02 12 54 Heating dots：80dot，heating time：1600us，heating interval：200us。 1B 40

	1B 37 09 A0 02 12 54 It is observed that the more heating time,the more printing dark.